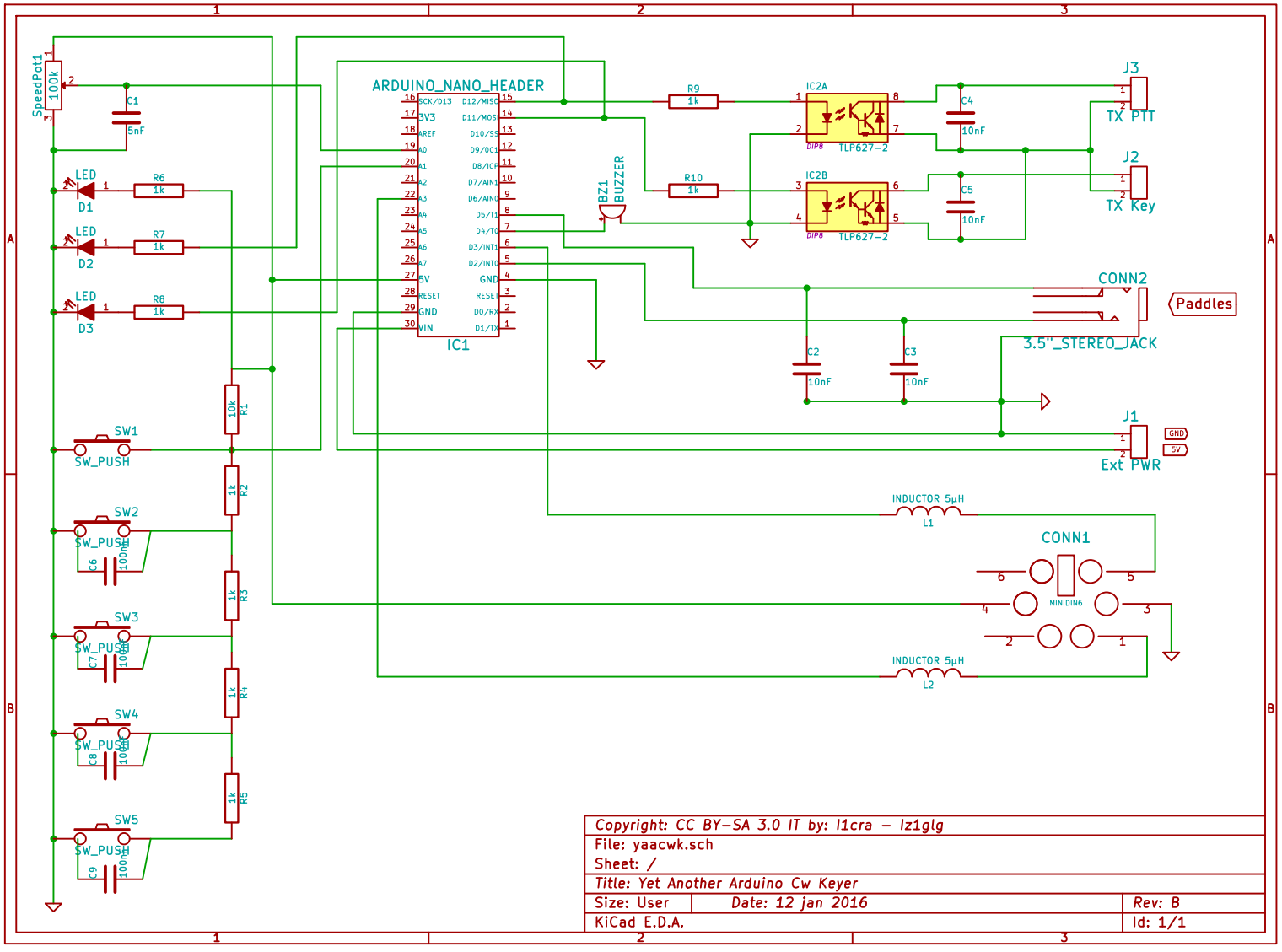

Copyright: CC BY-SA 3.0 IT by: I1cra – Iz1glg

File: yaacwk.sch		
Sheet: /		
Title: Yet Another Arduino Cw Keyer		
Size: User	Date: 12 jan 2016	Rev: B
KiCad E.D.A.		Id: 1/1